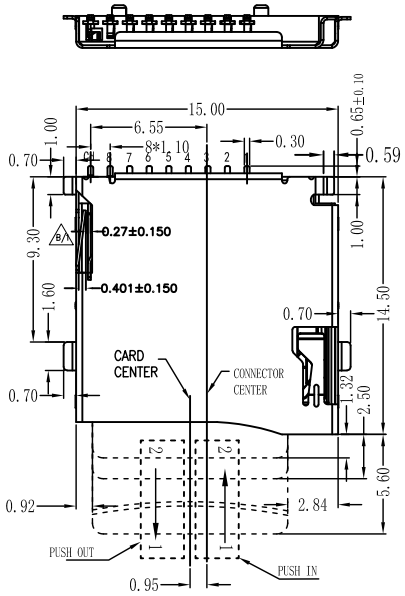

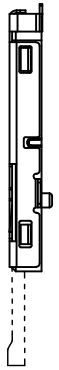

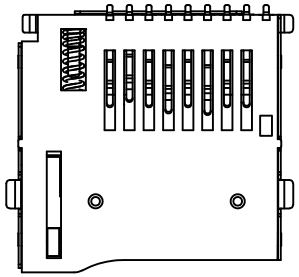

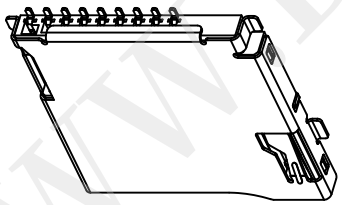

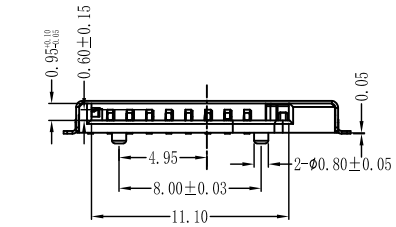

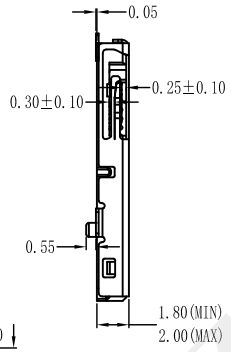

PIN NO.	NAME	YTPE	DESCRIPTION
1	DAT2	I/O/PP	DATE LINE(BIT2)
2	CD/DAT3	I/O/PP	CARD DETECT DATE LIN(BIT3)
3	CMD	PP	COMMAND RESPONSE
4	VDD	S	SUPPLY VOLTAGE
5	CLX	I	CLOCK
6	VSS	S	SUPPLY VOLTAGE GROUND
7	DAT0	I/O/PP	DATE LINE(BIT0)
8	DAT1	I/O/PP	DATE LINE(DIT1)
9	CD	CD	CD

NOTES:

1. MATERIAL:
   - HOUSING: LCP UL94-V0
   - CONTACT: C2680
   - SHELL: SUS304
2. PLATING:
   - CONTACT:GOLD FLASH PLATED.
   - SHELL: NICKEL PLATED.
3. ELECTRICAL CHARACTERISTICS
   - CONTACT CURRENT RATING :0.5A MAX
   - CONTACT RESISTANCE 100 mΩ MAX
   - INSULATION RESISTANCE 500 MO MIN

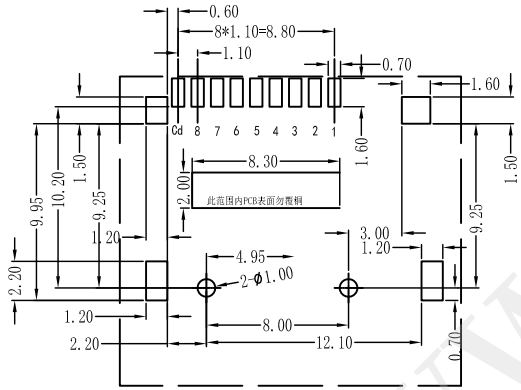

RECOMMENDED P.C.B HOLE LAYOUT
COMPONENT SIDE VIEW(TOLERANCE: +/-0.05)

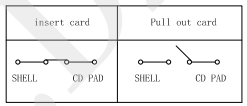

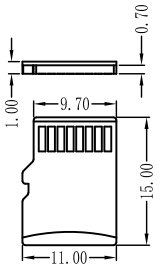

T-Flash

深圳市华宇创精密电子有限公司

TOLERANCE: X.X ±0.30 X.XX ±0.25 X.XXX ±0.15 X.° ±2° X.X° ±0.5°	DRAWED BY : 陈一鸣	DATE : 2014-02-23	PART NAME: TF PUSH 外焊
	CHECKED BY: 马跃	DATE : 2014-02-23	PART NO. HYC77-TF09-200
			MOLD NO.
UNIT: mm [inch]	APPROVED BY: 邱敏	DATE : 2014-02-23	DRAW NO: HYC-2603241138
SCALE:1:1 SIZE: A4			SHEET NO. 1 OF 1

WWW.DZYJZJ.COM